- - - - - - - - - - - - - - - - - - -

`LABORATORIO PREGEN
Carrera 15a No 106-42
BOGOTA

Batch 2133, Rack A, Plate 1, Well F10, 502998 FA
[D9334EEC3AB6AECA] Apr 29, 2026 13:32:40 Pressure = 65 bar (64 to 67)

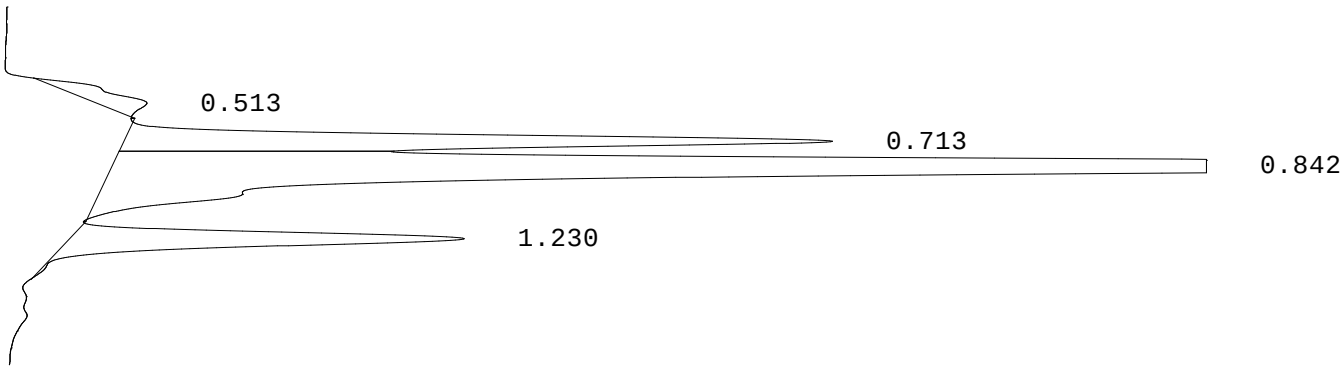

PEAK	RT	REL RT	% CONC	AREA	COMMENT
1	0.513	F 0.59	2.6%	38027	
2	0.713	F 0.81	18.6%	277510	Acetylated F peak
3	0.842	F 0.96	67.2%	1001122	Consistent with F
4	1.230	A 1.01	11.6%	172332	A peak
			Total Area:	1488991	

Codes:
1) Wide A peak
2) Area of A peak < 80%
3) Peak area greater than expected
4) Peak after A2
5) A1c > 10%
6) HbF or variant present
7) Total sample area too small/big
8) A2 is not within normal range